FIRST-YEAR ENGINEERING DESIGN PROJECT · CLIENT PROJECT · TEAM OF FOUR

SWING-A-BOX

A swing-out storage tray for a wheelchair user living with chronic joint pain and stiffness. It is light, opens with almost no effort, and mounts so it never blocks the chair. I led the design, the CAD and the magnetic detent, and printed every part on my own 3D printer.

MY ROLE	TEAM	DURATION	BUILT WITH
Project manager, design lead	**Four engineers**	**13 weeks**	**Sketch, cardboard, CAD, 3D print**



The final prototype: printed tray with a magnetic lid, swing arm, round detent hub and a Velcro strap mount.

THE CLIENT

Our client loves storytelling, writing and spending time with his dog. He uses a wheelchair, and chronic joint pain and stiffness make the zip bag he keeps his things in hard to open and unreliable while he's moving.

Our job was to replace it with something he could use with minimal effort, every day, without it getting in the way of his chair.

THE BRIEF

PROBLEM	Existing storage on the chair is unstable, which limits his independence and makes daily activities harder. He needs a reliable way to reach important items while mobile, with minimal effort. It must be lightweight, portable, durable, intuitive and built for repeated use, cost-effective to make at scale, and low-risk for the user.
OBJECTIVE	Portable, lightweight and cost-effective, while staying sturdy under a steady load with minimal wobble.
CONSTRAINT 1	**Safety first.** Every edge filleted, no sharp points anywhere that could hurt him.
CONSTRAINT 2	Must never restrict his wheelchair movement or block the chair's other parts during use.
FUNCTION	Rotate outward on demand and act as an easy-to-use storage tray, with items held in place by a magnetic lid.

Design evolution

My concept was the one the team chose to develop. We took it through four rounds, changing something every week.

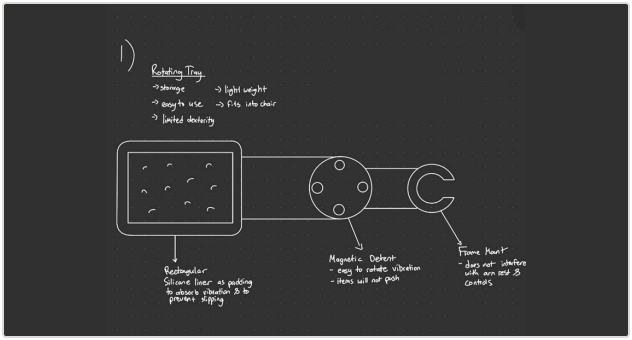

STAGE 1 · MY CONCEPT

A rotating tray

A rectangular tray on a swing arm, a magnetic detent so it rotates easily and holds its position, and a frame mount that stays clear of the armrest and controls. A silicone liner would absorb vibration and stop items sliding.

Selected by the team as the design to take forward.

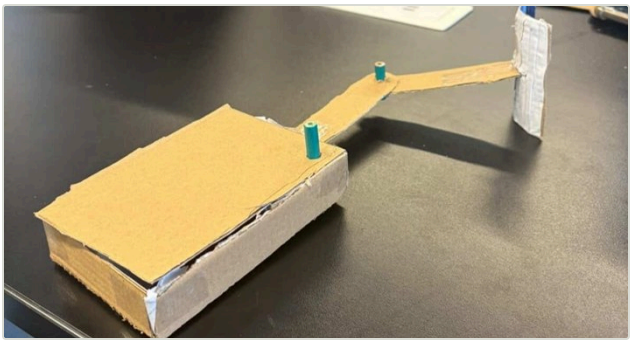

STAGE 2

Cardboard prototype

A quick physical mock-up to check the tray size, the arm length and how it swings, before committing anything to CAD.

Cheap to change: proportions were settled in cardboard, not in printed plastic.

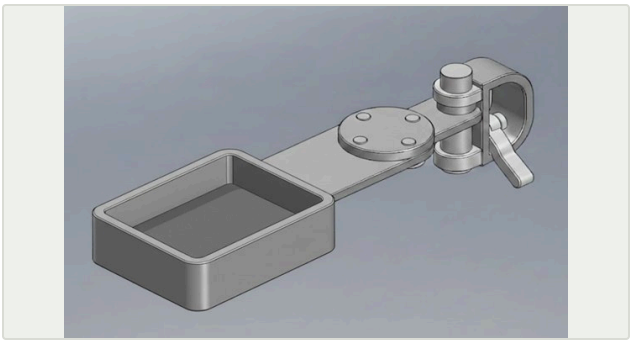

STAGE 3

CAD with a locking clasp

I modelled the tray, the swing arm and the detent hub with four magnet positions. This version clamped to the chair frame with a locking clasp and thumb screw.

Failed late: the clasp fit one frame size, but the design had to work on any wheelchair he might use in future (page 4).



STAGE 4

Printed final prototype

I printed every part on my own 3D printer. The clasp became a Velcro strap that fits any armrest, and a magnetic lid replaced the zip, so it opens with almost no grip strength.

Added through iteration: magnetic lid and Velcro mount.

How we worked. Each team member built one component (the rotating detent, the container, the lid and the Velcro mount), and we combined them into one final model. Every week we tested against the objectives and constraints and fed the results into the next iteration.

How it works

Swing it out, let it click into place, lift the lid. No clasps, zips or fine finger movements.

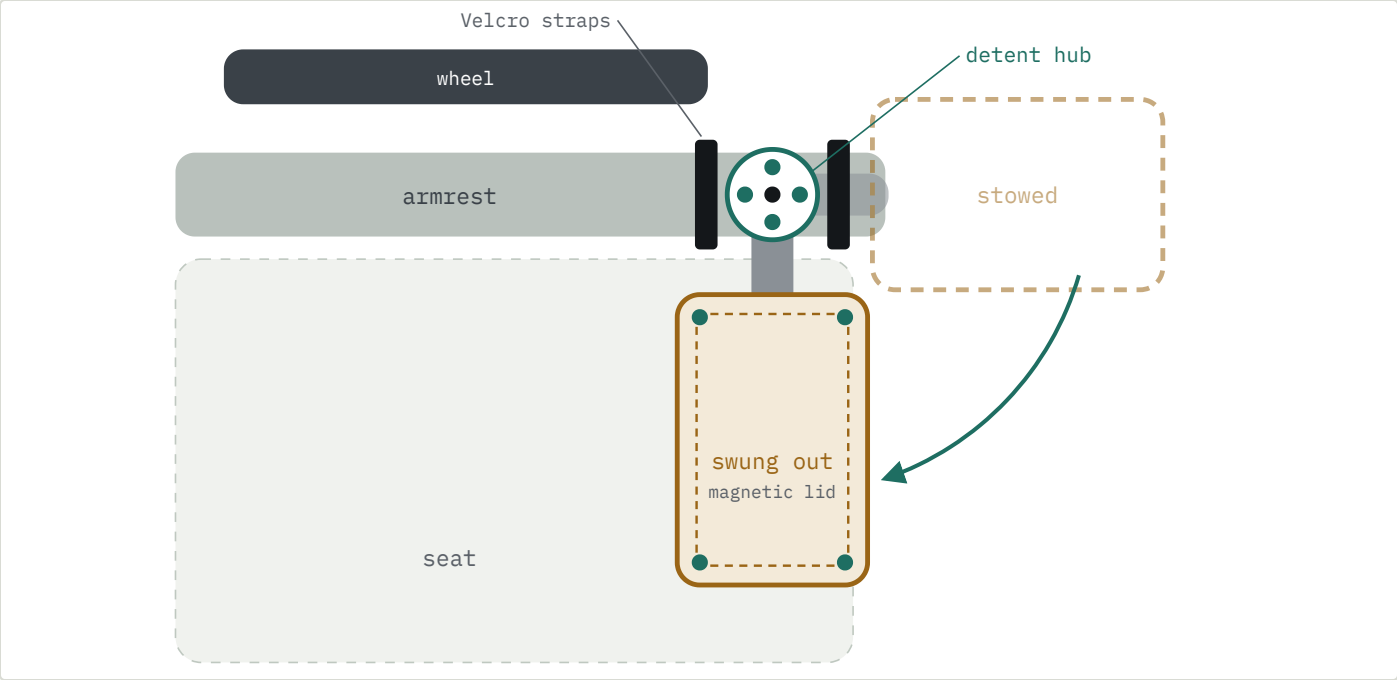

Top view, schematic and not to scale. The arm pivots at the detent hub; magnets in the hub pull it into its stops.

ONE MOTION EACH

1

Swing out
A light push swings the tray out to where he can reach it.

2

Click
Magnets in the hub pull the arm into set positions, so it holds still while the chair moves.

3

Lift
Corner magnets keep the lid shut; lifting it takes almost no grip strength.

4

Swing back
The tray parks clear, so it never restricts how he moves the chair.

DESIGN FEATURES

MAGNETIC DETENT
Magnets set in the hub give the arm fixed stops. It holds against bumps, yet frees with a light push, with no latch to pinch.

MAGNETIC LID
Corner magnets keep the lid shut while moving. Lifting it needs almost no grip, which matters for painful, stiff joints.

VELCRO MOUNT
A strap wraps the armrest, so it fits any chair he moves to and comes off without tools.

FILLETED EVERYWHERE
Every edge and corner is rounded, so nothing he brushes against can cut or catch.

PRINTED AND LIGHT
Thin-walled printed parts keep the weight down and make each part cheap to reprint or change.

LOW EFFORT BY DESIGN
Every action is a push, a swing or a lift. Nothing needs pinching, twisting or a firm grip.

What failed, what changed

Two late changes, both driven by the requirements, made the final design better than the plan.

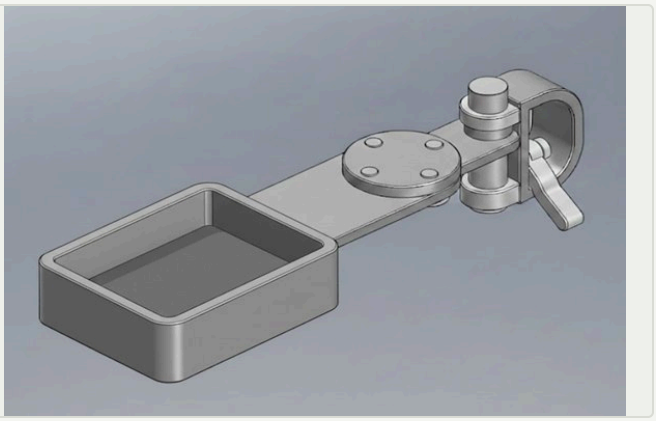

Before: locking clasp with thumb screw, sized to one frame.



After: Velcro strap that fits any armrest.

1 · THE CLASP HAD TO GO

The team had finished its individual models and we were about to commit to the final design when we learned it had to work on *any* wheelchair he might switch to. Our locking clasp was sized for one frame, so a key component failed the brief at the last minute.

Rather than lose time brainstorming from scratch, we switched straight to our second-best option: Velcro. A clamp fits one tube diameter; a strap adapts to any armrest. The trade-off is a less rigid connection, so wobble became something to watch in testing.

2 · TESTING MOVED IT ON TOP OF THE ARMREST

We planned to mount the system under the armrest. Running our testing plan showed it sat better on top, so I pushed for the change and we moved it.

Neither change was in the original plan. Both came from checking the design against the requirements every week.

REQUIREMENTS, TRACED TO FEATURES

REQUIREMENT	DESIGN FEATURE THAT MEETS IT
Safe to use	Every edge and corner filleted, no sharp points
Never blocks the chair	Mounts on top of the armrest and swings clear when stowed
Minimal effort to use	Swing arm, magnetic detent and magnetic lid: no zip, clasp or pinch grip
Fits any future wheelchair	Velcro strap instead of a clamp sized to one frame
Lightweight and portable	Thin-walled 3D-printed parts, removable without tools
Sturdy, minimal wobble	Detent holds the arm in position; top-of-armrest mounting chosen through testing
Cost-effective at scale	Printed parts plus off-the-shelf magnets and Velcro

Team, leadership and reflection

Project manager and design lead on a team of four.

THE TEAM

What we did together

- Explored many storage ideas and combined the best parts into one design
- Moved from hand sketches to a cardboard prototype, CAD, then a 3D print
- Iterated every week, adding the magnetic lid and the Velcro mount
- Each built one component, then joined them into the final model
- Tested regularly against every objective and constraint, and refined from the data

ME

What I owned

- **Project management:** led meetings in and outside Design Studio, set a weekly agenda of delegated tasks
- **Concept:** my prototype was the one we took forward
- **CAD and detent:** the drawings, the CAD and the detent mechanism that made the design unique
- **Manufacturing:** printed every part on my own 3D printer
- **Testing:** led the testing plan and pushed the top-of-armrest change it revealed

> **The idea on paper is never the final design. The first design is usually not the best one, and that is a good thing.**
>
> WHAT THIS PROJECT TAUGHT ME

WHAT I LEARNED

- **Persistence.** A component failing at the last minute is a setback, not the end.
- **Change is good.** Every iteration measured against the requirements made the design better.
- **Failure teaches.** The clasp failing pushed us to a mount that works on any chair.

HOW I'LL START THE NEXT PROJECT

- With an open mind, ready for parts of the plan to fail.
- Testing early against every requirement, so problems like the clasp show up sooner.
- Treating each failure as information about what the design really needs.

SKILLS THIS PROJECT USED

`Client-centred design` `Project management` `Concept sketching` `Rapid prototyping` `CAD` `3D printing` `Mechanism design` `Requirements tracing` `Testing and iteration` `Team leadership`

FROM SKETCH TO PROTOTYPE

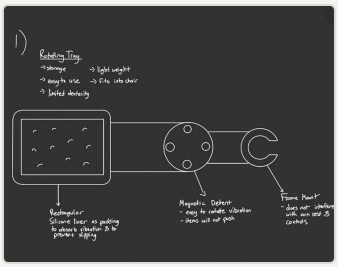

1 · concept sketch

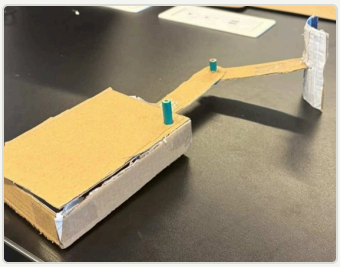

2 · cardboard

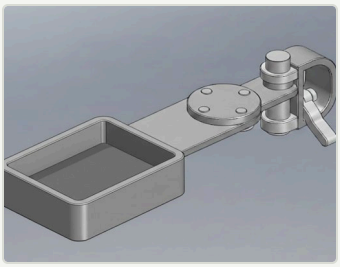

3 · CAD



4 · printed prototype